1400W POWER MIXER

Safety and Operating Manual



A QUALITY BRAND OF QEP

Safety First

Read manual before use. Keep hands, arms and face clear of blade whilst in use. Always have safety guard in place when machine is switched on at mains. Always wear Vitrex Protective Equipment when using hand or power tools.

1400W POWER MIXER

Safety and Operating Manual

Contents

Safety Instructions **3-4**
Assembly and Operating Instructions **5**
Maintenance and Warranty **6**
Machine Specifications **7**

Safety Instructions

Product Description

The machine has been designed to mix liquid and powdery building materials such as paint, mortar, adhesive, plaster and similar substances. The relevant mixing action (which depends on the consistency of the materials and the quantity that has to be mixed) must be set up for the appropriate mixing tool.

This manual must be kept in a safe place so that the information that it contains is always available. This operating manual must accompany the equipment if it is transferred to somebody else.

We do not accept any liability for accidents or damage arising from ignoring this manual and the safety instructions.

Safety Instructions

When using power tools, you must observe the following basic safety precautions in order to ensure protection from electric shocks, injury and fire. Read and follow all the instructions before using this power tool. Look after the notes on safety.

This machine has been double insulated in accordance with EN60745: therefore, an earth wire is not necessary.

USE THE CORRECT VOLTAGE

The power supply voltage must match the information quoted against the tools.

Use of an approved RCD circuit breaker between the machine and the electrical power point is highly recommended.

USE PROPER EXTENSION CORD

Only use an approved extension cable that is suitable for the machine's power.
When the extension cable is on a reel, unroll the cable in its entirety.

SWITCH OFF THE MACHINE IMMEDIATELY IN CASE OF:

1. Malfunction in the mains plug, power cable or damage to the cable
2 Broken switch
3 Smoke or strong smell of burning

General Safety Rules

Warning! Read all safety warnings and all instruction. Failure to follow the warnings and instructions may result in electric shock, fire and/or serious injury.

Save all warnings and instructions for future reference.

1 Work Area Safety

a keep area clean and well lit. Cluttered or dark areas invite accidents

b Do not operate power tools in explosive atmospheres, such as in the presence of flammable liquids, gases or dust. Power tools create sparks which may ignite the dust or fumes.

c Keep children and bystanders away while operating a power tool. Distractions can cause you to lose control.

2 Electrical Safety

a Power tool plugs must match the outlet. Never modify the plug in any way. Do not use any adapter plugs with earthed (grounded) power tools. Unmodified plugs and matching outlets will reduce risk of electric shock.

b Avoid body contact with earthed surfaces, such as pipes, radiators ranges and refrigerators. There is an increased risk of electric shock if your body is earthed.

c Do not expose power tools to rain or wet conditions. Water entering a power tool will increase the risk of electric shock.

d Do not abuse the cord. Never use the cord for carrying, pulling or unplugging the power tool. Keep cord away from heat, oil, sharp edges or moving parts. Damaged or entangled cords increase the risk of electric shock.

e When operating a power tool outdoors, use an extension cord suitable for outdoor use. Using a cord suitable for outdoor use reduces the risk of electric shock.

f If operating a power tool in a damp location is unavoidable, use a residual current device (RCD) protected supply. Use of an RCD reduces the risk of electric shock.

3 Personal Safety

a Stay alert, watch what you are doing and use common sense when operating a power tool. Do not use a power tool while you are tired or under the influence of drugs, alcohol or medication. A moment of inattention while operating power tools may result in serious personal injury.

b Use personal protective equipment. Always wear eye protection. Protective equipment such as dust mask, non skid safety shoes, hard hat or hearing protection used for appropriate conditions will reduce personal injuries.

c Prevent unintentional starting. Ensure the switch is in the off position before connecting to power source and/or battery pack, picking up or carrying the tool.

d Remove any adjusting key or spanner before turning the power tool on. A spanner or a key left attached to a rotating part of the power tool may result in personal injury.

e Do not overreach. Keep proper footing and balance at all times. This enables better control of the power tool in unexpected conditions.

f Dress properly. Do not wear loose clothing or jewellery. Keep your hair, clothing and gloves away for moving parts. Loose clothes, jewellery or long hair can be caught in moving parts.

g If devices are provided for the connection of dust extraction and collection facilities, ensure these are connected and properly used. Use of dust collection can reduce dust related hazards.

4 Power Tool Use and Care

a Do not force the power tool. Use the correct power tool for your application. The correct power tool will do the job better and safer at the rate for which it was designed.

b Do not use the power tool if the switch does not turn it on or off. Any power tool that cannot be controlled with the switch is dangerous and must be repaired.

c Disconnect the plug from the power source and/or battery pack from the power tool before making any adjustments, changing accessories, or storing power tools. Such preventative safety measures reduce the risk of starting the power tool accidentally.

d Store idle power tools out of the reach of children and do not allow persons unfamiliar with the power tool or these instructions to operate the power tool.

e Maintain power tools. Check for misalignment or binding of moving parts, breakage of parts and or any other condition that may affect the power tool's operation. If damaged, have the power tool repaired before use. Many accidents are caused by poorly maintained power tools.

f Keep cutting tools sharp and clean. Properly maintained cutting tools with sharp cutting edges are less likely to bind and are easier to control.

g Use the power tool, accessories and tool bits etc. in accordance with these instructions, taking into account the working conditions and the work to be performed. Use of the power tool for operations different from those intended could result in a hazardous situation.

5 Service

a Have your power tool serviced by a qualified repair person using only identical replacement parts. This will ensure that the safety of the power tool is maintained.

Precautions on Using Mixer

- The equipment must never be used in surroundings where an explosive atmosphere exists. Never mix in solvents or substances containing solvent that have flash points below 21°C.
- Do not let the cable touch any parts of your body.
- Only use the extension cable approved for use in the working area.
- The unit must only be started and stopped when it is inside a mixing vessel. Ensure that the mixing vessel is placed on a solid, secure base.
- Never reach into the mixing vessel with your hands or any other object during the mixing process.
- We recommend that you always wear industrial safety gloves and safety goggle when working with the mixer.
- Wearing close fitting clothes is mandatory.
- Always allow for reaction torque.
- Always wear a dust mask.

How To Use The Mixer

Before setting up, repair or maintenance of your appliance you must always turn off the operating switch and pull out the mains plug.

Before Initial Operation

- Check if the rated frequency of the mains supply corresponds to the details of the type place.
- Before using the tool, read the instruction book carefully.

Mixer Assembly (Fig 2)

First screw mixer part (6a) together with mixer part (6b). Screw the mixer (6) into the mixer holder (5) afterwards. Use the two spanners to do this. Use one of the spanners (a) to hold the mixer holder (5) in place and then use the second spanner (b) to tighten up the mixer (6). Proceed in the reverse sequence to undo the mixer.

The paddle's shape could be different to the one shown on the front cover.

Starting The Machine

On Switch

Step 1: Press the locking knob (2).

Step 2: Press the switch (1).

Step 3: Press the locking knob (2) to lock in place.

Off Switch

Press the switch (1).

Speed Control

Use the speed control (Fig 1) (3) to select the speed.

Switching Between 1st - 2nd Gear (Fig 1) (4)

The switch position enables you to work at high or low speeds. The gear switch position should only be changed when the unit stopped, in order to prevent the gearing from being damaged.

- 1st gear
- 2nd gear

Working With The Paint and Mortar Mixer

The mains plug must be disconnected before the mixing tool is changed.

The unit should be run at low speed before it is immersed in or removed from the mixture. The speed should only be increased to maximum after it has been fully immersed in the mixture, in order to ensure that the motor is kept as a cool as possible. The machine must be moved around inside the mixing vessel during the mixing process. Continue the mixing process until all of the mixing components have been processed. Always clean the mixer after you have finished using it.

Fig 1

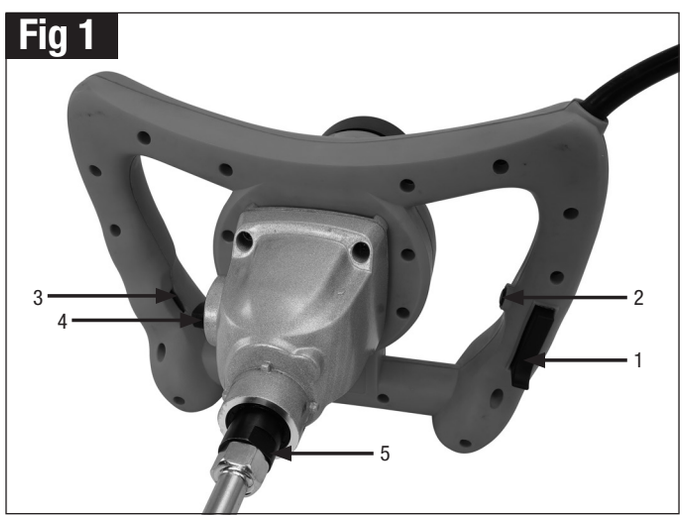

Fig 2

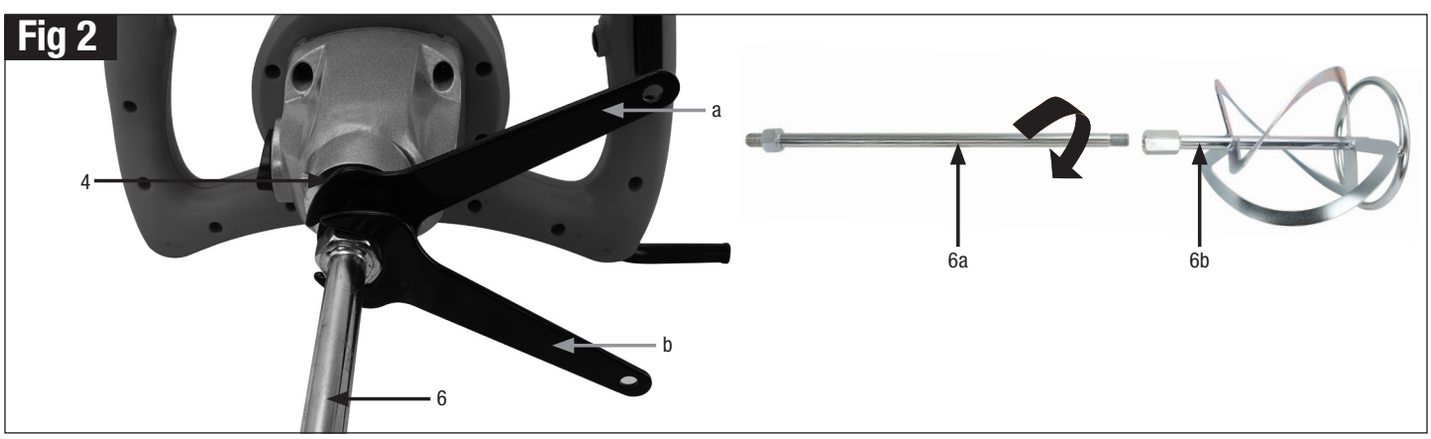

Care and Maintenance

Remove the plug from the socket before carrying out any adjustment, servicing or maintenance.

Your power tool requires no additional lubrication or maintenance.

Always store your power tool in a dry place.

If the supply cord is damaged, it must be replaced by the manufacturer, their service agent or similarly qualified persons in order to avoid a hazard.

If a fault can not be rectified, return the mixer to an authorised dealer for repair.

Cleaning

Keep the safety devices, ventilation slots and motor housing as free of dirt and dust as possible.

Clean the unit by rubbing it with clean cloth or blow it clean using a low pressure compressed air.

We recommend that you always clean the unit immediately after using it.

- Clean the unit regularly by rubbing it with a damp cloth and a little soft soap.
  Do not use cleaners or solvents; these will attack the plastic parts of the units.
  You must also ensure that water cannot get into the inside of the unit.

Carbon Brushes

- If excessive sparking occurs you must have the carbon brushes checked by a qualified electrician
- **Attention!**
  Only a qualified electrician is allowed to change the brushes

Maintenance

- There are no parts fitted inside the unit that require maintenance.
  For your own safety, never remove parts or accessories of the electric tool during operation. In case of fault or damage, have the electric tool repaired only by a specialist workshop or by the manufacturer.

Specifications

	MIX1400	MIX1400IND
Power Supply	**230V** 50Hz	**110V** 50Hz
Motor	1400W	1400W
RPM (no load)	0–460 / 0-700 rpm	0–460 / 0-700 rpm
Number of Gears	2	2
Mixing Paddle Diameter	140mm	140mm
Weight	5.3kg	5.3kg

CE UKCA

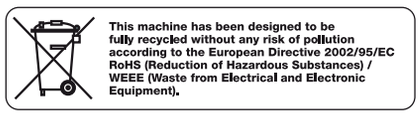

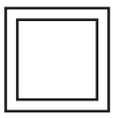

For further information or advice, please call the Vitrex helpline on +44 (0) 1283 245 430

QEP Co. UK Ltd. is committed to a continuing program of product improvement. Consequently, please be advised that specifications, performance, appearance and dimensions of QEP/Vitrex products are subject to change without notice. For more up-to-date information about our range of products, please contact our customer service office on +44 (0) 1283 245 430 or your local distributor.

This power mixer has been manufactured to a high quality standard. It is guaranteed against faulty materials and workmanship for 12 months from the date of purchase. Any claim must be accompanied by a valid till receipt as proof of purchase. A faulty machine will either be repaired or replaced free of charge. If a direct replacement is not available, an alternative to the same or greater value/ specification will be offered.

This guarantee does not cover machine defects caused by or resulting from:

a) Misuse, abuse or neglect, b) Trade, professional or hire use, c) Repairs attempted by anyone other than our authorised repair agent, d) Ingress of foreign objects, substances or accident

In the unlikely event of a fault occurring, contact should be made through the Vitrex technical helpline +44 (0) 1283 425 430

The above guarantee is only valid within the UK and does not affect your statutory rights.

The guarantor is QEP Co. UK Ltd., The Maltsters, Wetmore Road, Burton upon Trent, DE14 1LS (Registered No. 04988177 England)

QEP Co. UK Ltd., The Maltsters, Wetmore Road, Burton upon Trent, DE14 1LS

PRCI SAS - Groupe QEP, Avenue du Moulin De La Jasse, BP 30, 34750 Villeneuve Les Maguelone, France